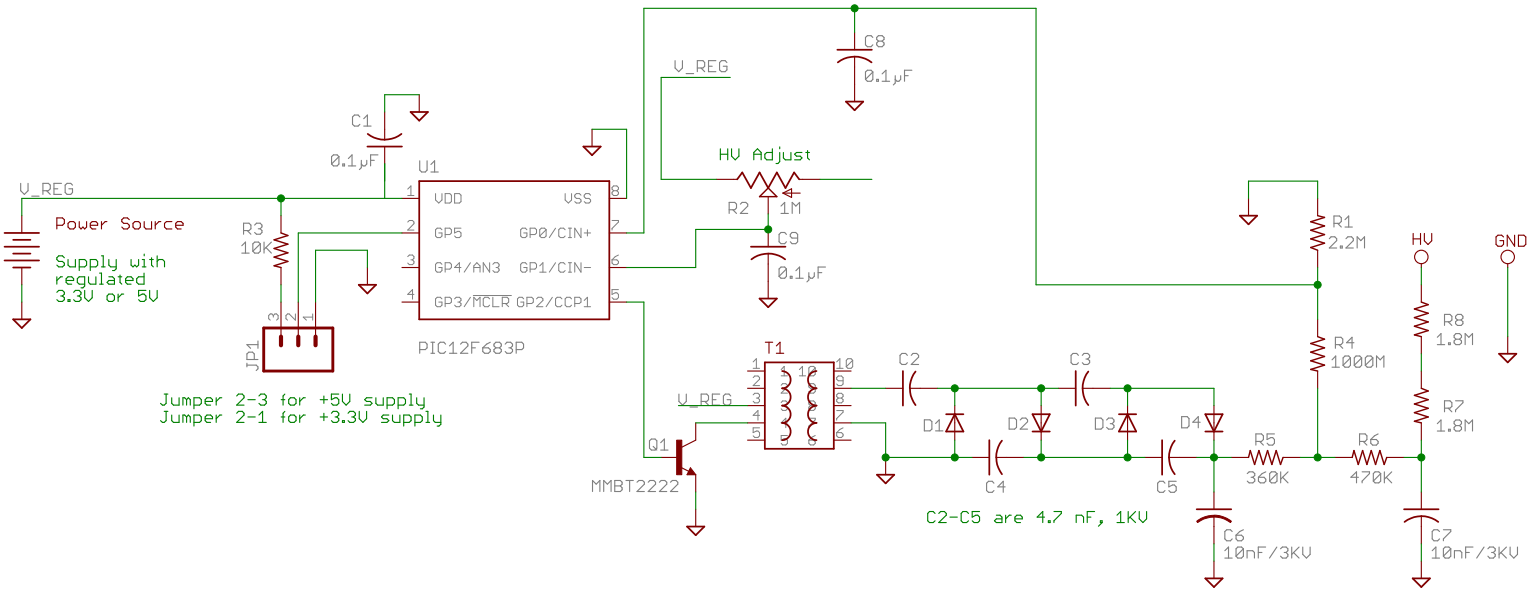

TITLE: Zeus-1	
Document Number:	REV: 1.0
Date: 10/17/2011 11:28:09 AM	Sheet: 1/1